META 02 Two-hole mixer with individual rosettes - Chrome

32 800 625 Product version from 5/11/2021

- 200mm projection
- pivotable spout 360°
- air-enriched flow
- height of mixer 275 mm
- height up to aerator 180 mm
- hole diameter spout 35 mm
- single-lever mixer hole diameter 35 mm
- max. flow 7 l/min at 3 bar flow pressure
- lead-free
- WRAS

Operating unit can be positioned freely.

Recommended miscellaneous

Strainer waste with control handle - Chrome 10 710 970-00

Recommended miscellaneous

Dispenser with rosette - Chrome 82 444 970-00

META 02 Two-hole mixer with individual rosettes - Chrome

32 800 625 Product version from 5/11/2021

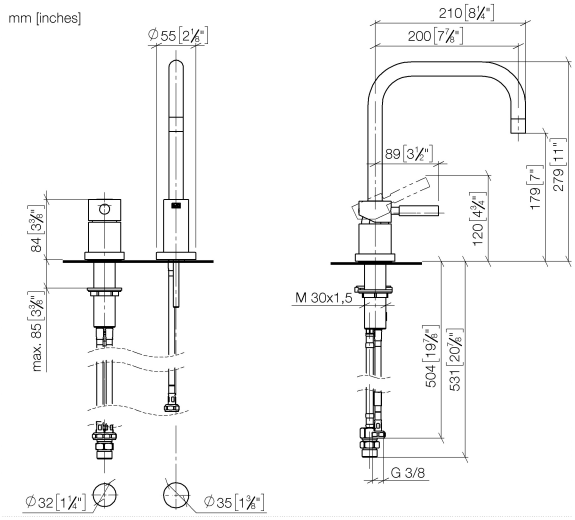

Flow rate chart

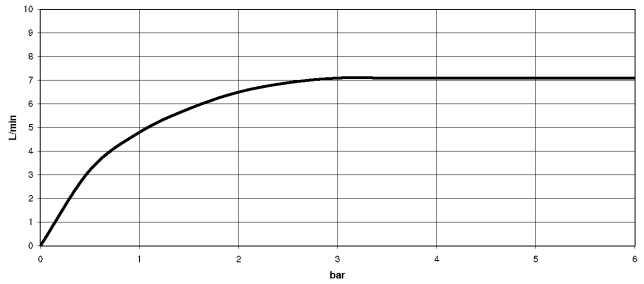

Codes & Standards

DIN 4109	EN 817	ISO 3822	Scottish Water Byelaws
UK Water Supply Regulations	Ü-Zeichen	VA-Zeichen	

META 02 Two-hole mixer with individual rosettes - Chrome

32 800 625 Product version from 5/11/2021

Certificates

ETA_18 LGA_9 WRAS_2101

META 02 Two-hole mixer with individual rosettes - Chrome

32 800 625 Product version from 5/11/2021

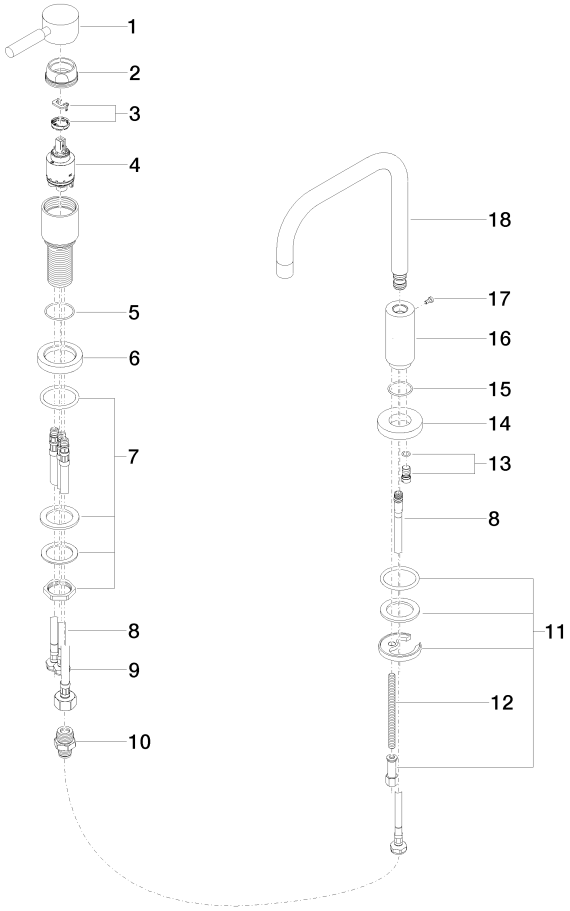

Spare parts list

No.	Item Number	Name	Quantity used	Delivery time
1	90 20 62 040 00-00	handle	1	10
2	09 24 04 107-00	nut	1	10
3	90 28 10 148 00 90	accessories	1	2
4	90 15 05 065 00 90	cartridge	1	2
5	09 14 10 102 90	seal	1	2
6	09 28 10 111-00	rosette	1	10
7	04 23 10 032 46 90	fixing set	1	2
8	04 30 04 104 00 90	hose	3	2
9	04 30 04 019 00 90	hose	1	2
10	90 24 03 514 00 90	nipple set	1	2
11	04 30 11 038 00 90	fixing set	1	2
12	09 31 11 012 90	pin	1	2
13	04 31 20 046 10 92	set	1	2
14	09 28 10 064-00	rosette	1	10
15	09 14 10 120 90	seal	1	2
16	09 11 10 062 10-00	connection	1	10
17	09 30 30 057 90	screw	1	2
18	90 28 22 208 00-00	spout	1	10

We reserve the right to change designs, product range and technical specifications without prior notice.
More information can be found at: www.dornbracht.com +49 (0) 2371 8899 900 mail@dornbracht.com